ROTAVAL

Keeping the World's Industries Solidly in control

Rotary Valves and Blowing Seals for Granulate Solids

Inlet sizes 125mm-450mm
Capacities up to 92m³/hour

Rotary Valves (HDG) and Blowing Seals (BSG) to handle granules

Purpose-designed to handle plastic pellets under flood-feed conditions, the Rota Val Granule Valve provides efficient discharge with minimal product damage whilst retaining full throat opening and single rotor configuration.

HDG
Rotary valve

BSG
Blowing seal

The efficiency of these valves is achieved by incorporating the following features:

- Offset inlet and outlet
- Special rotor/housing design, to ensure that voids are created dynamically at each end of the rotor pockets
- Novel relief in the valve bore, with an integrally-cast profile to deflect overspill into the pocket voids away from the point of shear

The latter two features do not add to the cost of the valve yet considerably enhance the ability of the long-established offset design to reduce product damage and are suitable for any shearable granulated product where particle size does not exceed 5mm

These valves are available in either the drop-through Rotary Valve (HDG) or Blowing Seal (BSG) types

Note:

For handling products with larger and/or unshearable particles, (e.g. pebbles) the Rota Val Tandem Metering and Sealing Valve assembly should be utilised. Please consult Rota Val for further details

Valve Selection

FOR GUIDANCE ONLY. EXACT THROUGHPUT CAN BE CALCULATED USING THE FORMULA BELOW

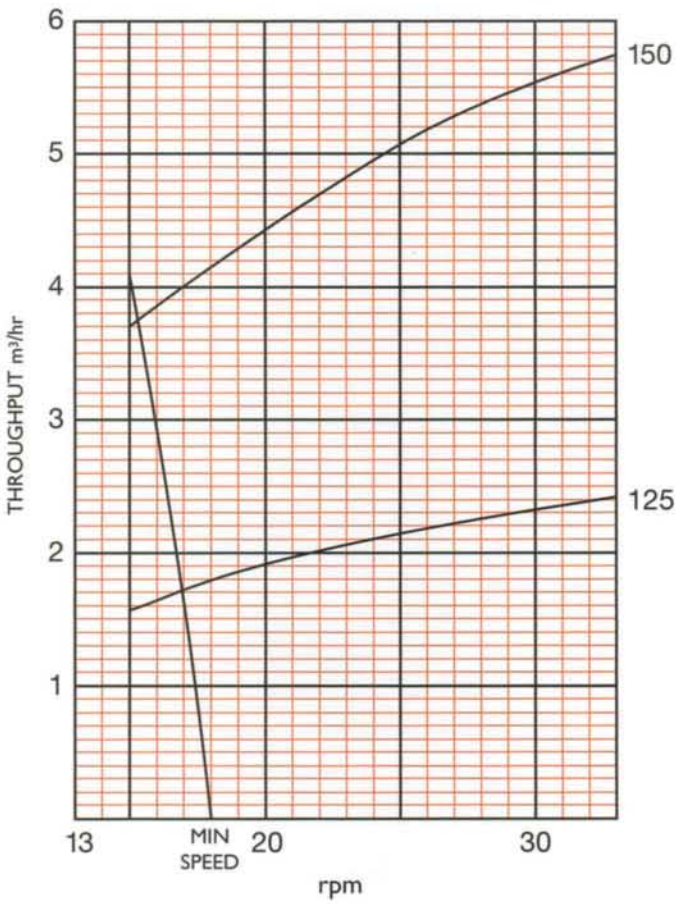

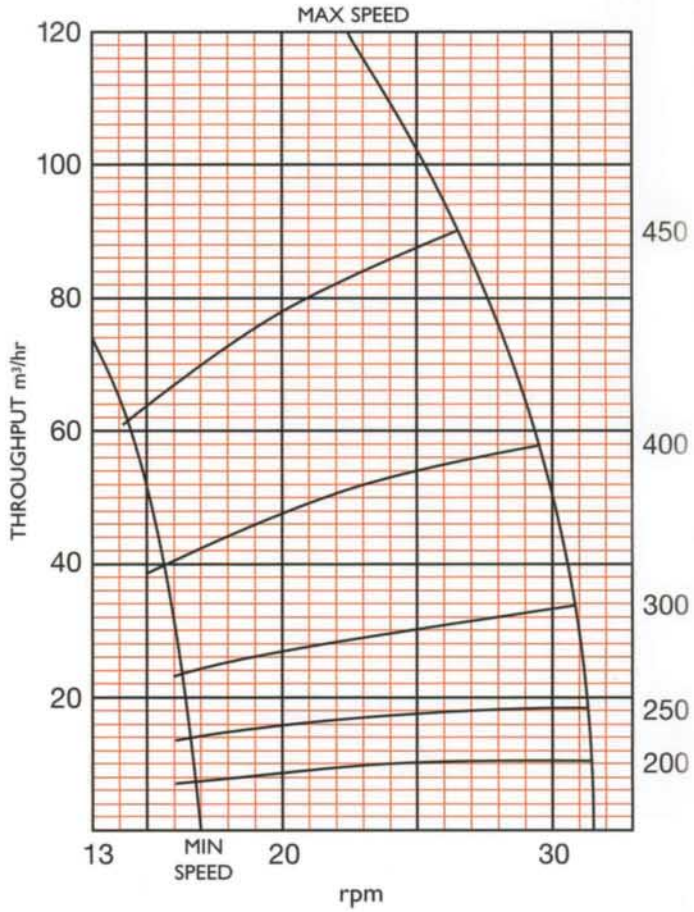

The throughput graphs are for guidance only and are based on moderately free-flowing products; they assume that leakage air does not oppose flow. A more accurate assessment can be calculated using the formula below.

$$\text{Valve speed (rpm)} = \frac{\text{throughput (kg/hr)}}{\text{loose bulk density of product (kg/m}^3\text{) x capacity (m}^3\text{/hr/rpm) x filling efficiency}}$$

Valve size	125	150	200	250	300	400	450
Capacity (m^3/hr/rpm)	0.140	0.332	0.622	1.109	2.100	3.731	6.056

The assessment of filling efficiencies is a matter of judgement; our technical staff will be pleased to assist if required

HDG Rotary Valves

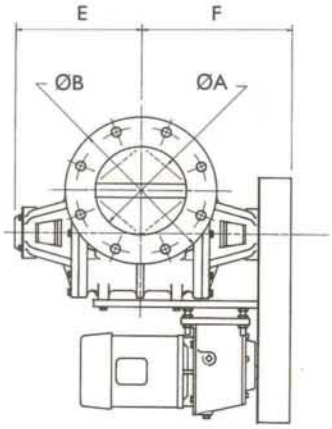

Round flange drilling BS4504 PN10
(DIN 2501 PN10) standard.
Most other options available.

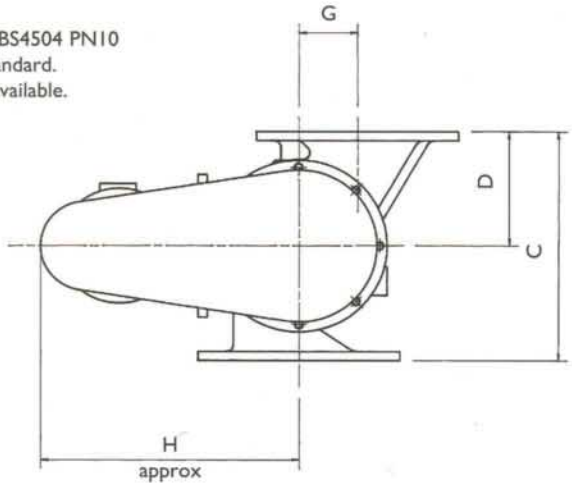

Valve size	ØA	ØB	C	D	E	F	G	H
125	127	254	270	135	193	250	70	375
150	155	280	335	168	241	275	85	375
200	206	343	400	200	287	330	100	437
250	257	406	480	240	312	350	130	437
300	310	483	580	290	371	405	160	544
400	395	597	720	372	404	450	190	622

Materials of construction and/or alternative valve features may alter some of the stated dimensions. This information is therefore to be used for guidance only. Use certified drawings for planning-in. These will be issued against an order. These valves must not be considered as load-bearing without prior consultation.

BSG Blowing Seals

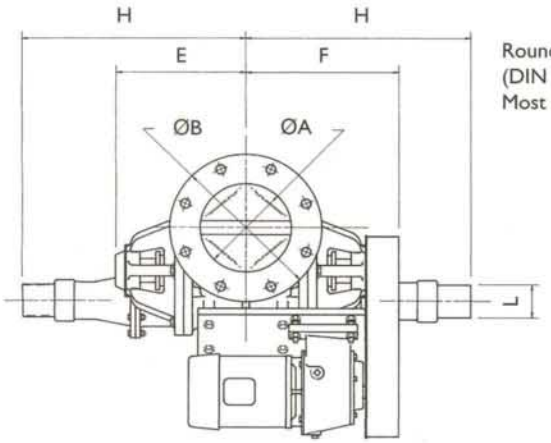

Round flange drilling BS4504 PN10
(DIN 2501 PN10) standard.
Most other options available.

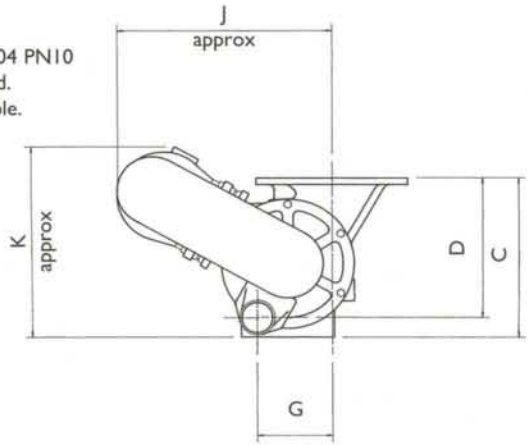

Valve size	ØA	ØB	C	D	E	F	G	H	J	K	ØL	ØL alt
150	155	280	330	270	241	275	144	422	430	400	63.5	76
200	206	343	388	325	287	326	169	507	500	450	76	103
250	257	406	460	388	312	350	216	532	530	480	76	103
300	310	483	570	450	371	405	280	665	700	630	114	127

Materials of construction and/or alternative valve features may alter some of the stated dimensions. This information is therefore to be used for guidance only. Use certified drawings for planning-in. These will be issued against an order. These valves must not be considered as load-bearing without prior consultation.

Gericke
Richtungweisende Schüttguttechnik

CH-8105 Regensdorf
Tel.: +41(0) 1 871 36 36
Fax: +41(0) 1 871 36 00
E-mail: gericke.ch@gericke.net
Internet: www.gericke.net

PROORGANIKA S.A.
01-755 Warszawa, ul. Krasińskiego 69
tel.: 022 32 60 350, fax: 022 32 60 351

www.proorganika.com.pl
e-mail: proorganika@proorganika.com.pl